FLUONICS Lined Products

Series FBA2

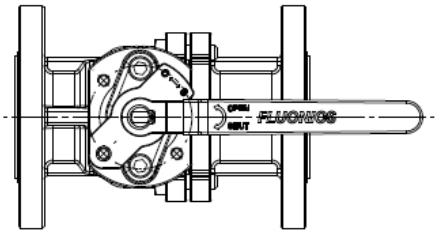

| Pressure-Temperature Chart

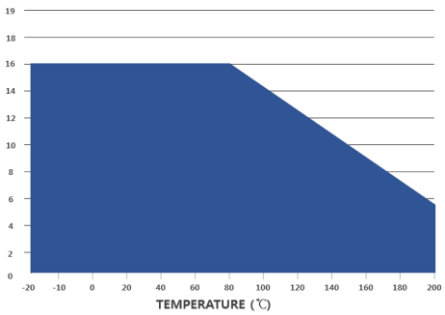

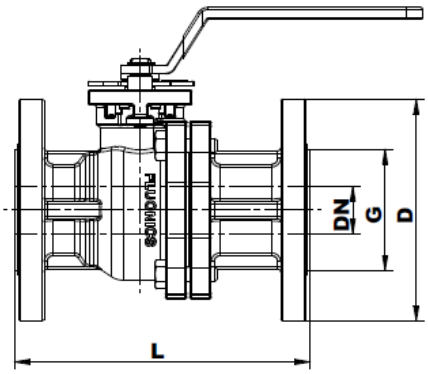

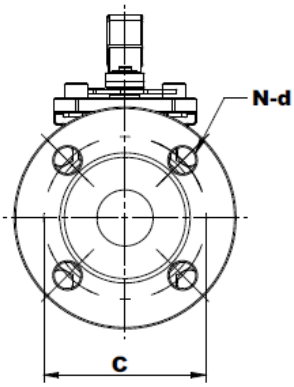

SIZE		Operating Torque(N·m)	Cv
½"	15A	8.8	15
¾"	20A	8.8	35
1"	25A	9.8	69
1½"	40A	15.7	225
2"	50A	22.5	310
-	65A	37	230
3"	80A	49	830

PN 16_EN 558

SIZE	DN	L	D	C	G	N-d
DN15	15	130	95	65	45	4-14
DN20	20	150	105	75	52	4-14
DN25	25	160	115	85	60	4-18
DN40	38	200	150	110	82	4-18
DN50	48	230	165	125	97	4-18
DN65*	65	290	185	145	117	4-18
DN80	76	310	200	160	132	8-18

* 65A reduced port

PN16_HG/T 3704

SIZE	DN	L	D	C	G	N-d
DN15	15	140	95	65	45	4-15
DN20	20	140	105	75	52	4-15
DN25	25	160	115	85	60	4-19
*DN40	38	180	150	110	82	4-19
*DN50	48	200	165	125	97	4-19
*DN65	65	220	185	145	117	4-19
*DN80	76	250	200	160	132	8-19

* DN40 to 80 reduced port