FLUONICS Lined Products

Series FBF

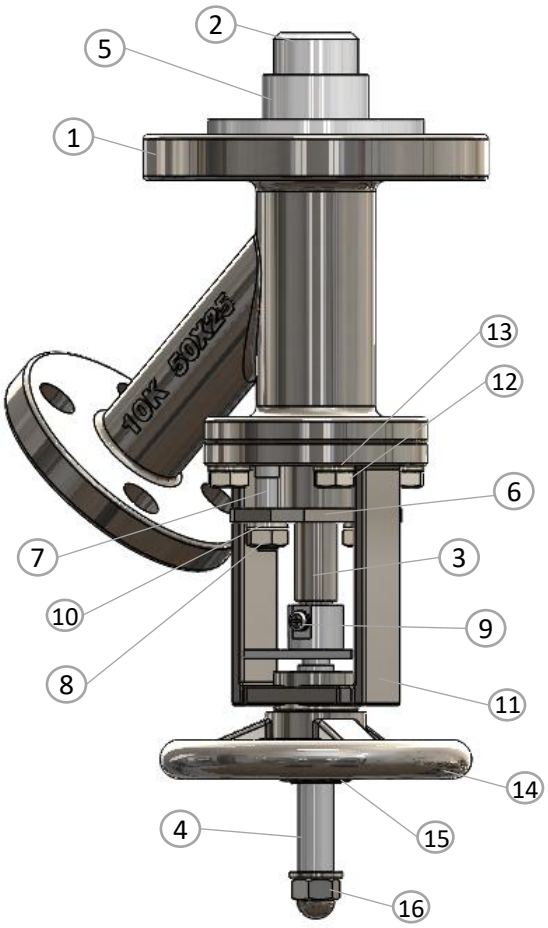

LINED TANK BOTTOM FLUSH VALVE STRUCTURE & SPECIFICATIONS

NO.	PART NAME	MATERIAL
1	HOUSING	CF8/WCB with PFA
2	DISC	PFA
3	SHAFT	SUS304 with PFA
4	SHFAT FRAME	SUS304
5	SEALAT GASKET	PTFE
6	SEALING PUSHER	SUS304
7	STUD BOLT	SUS304
8	NUT	SUS304
9	SCREW	SUS304
10	SPRING WASHER	SUS304
11	FRAME	SUS304
12	HEX BOLT	SUS304
13	SPRING WASHER	SUS304
14	HANDLE	FC20
15	INDICATOR	SUS304
16	ADJUSTING BOLT	SUS304